QS2-07-464/4S

3 DB SMA 90° HYBRID COUPLER

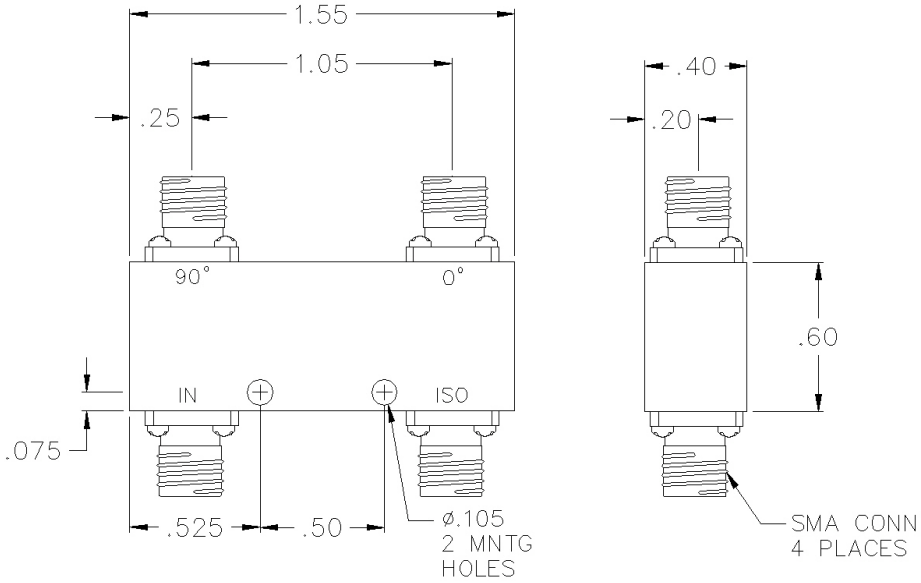

SPECIFICATIONS

Name:	QS2-07-464/4S
Bandwidth:	4.5:1
Frequency Range:	4-18 GHz
Coupling Loss:	3.5 ± 0.8 dB max.
Isolation:	15 dB min.
Amplitude Balance:	1.6 dB max.
Phase Balance:	8° max.
VSWR:	1.50:1 max.
Package Type:	SMA

Dimensions are in inches. Decimal tolerance: 2 Place: ± .02, 3 Place: ± .010
All specifications are subject to change without notice at any time. Rev: 190404

PULSAR MICROWAVE CORPORATION
www.pulsarmicrowave.com · 48 Industrial St West, Clifton NJ 07012 · Tel: 973-779-6262 · Fax: 973-779-2727 · sales@pulsarmicrowave.com