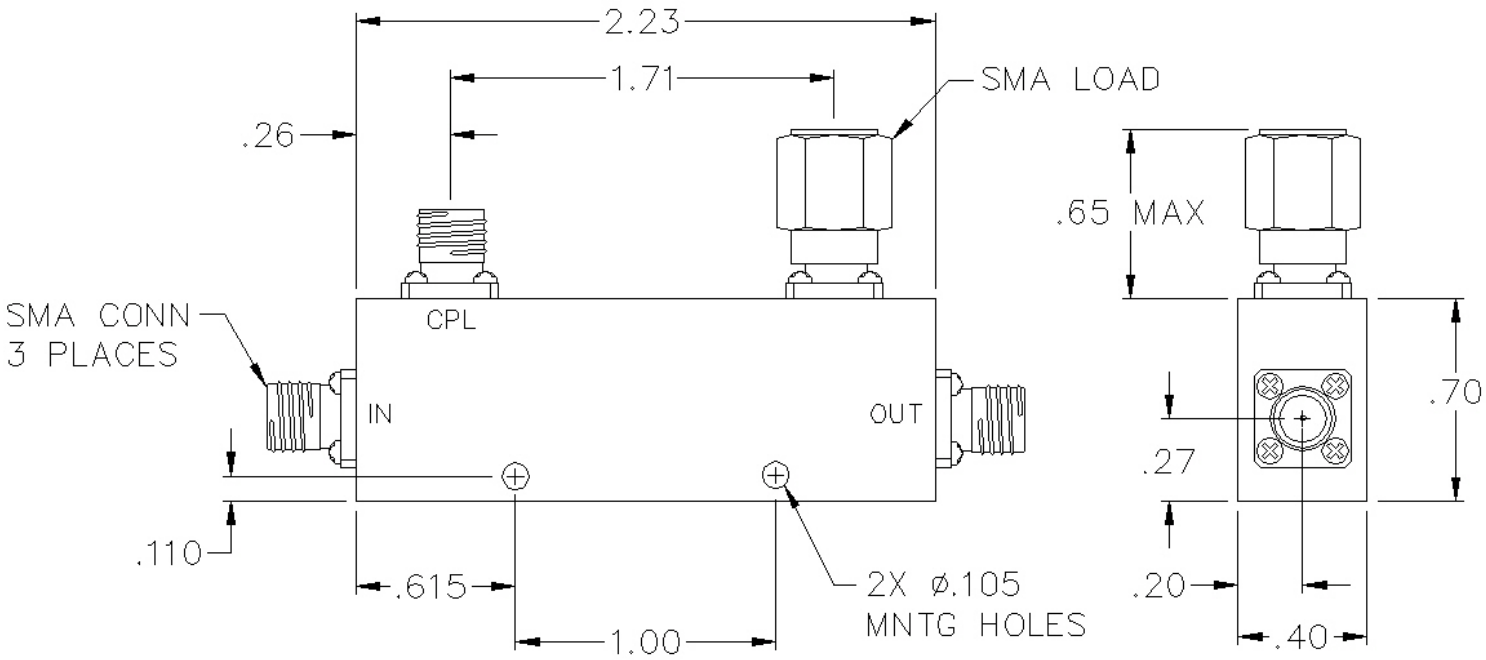

SPECIFICATIONS

Frequency Range:	1.0 - 4.0 GHz
Coupling:	20.0 ± 1.00 dB
Insertion Loss[1]:	0.40 dB Max
Coupling Flatness:	± 0.75 dB Max
Directivity:	23 dB Min
VSWR:	1.20:1 Max
Power Input:	50 W Max
Power Reflected:	50 W Max
Power Peak:	3 kW Typ
Connector Type:	SMA

Notes:

Device tested in a 50 Ohm system.

1. Does not include coupling loss.

PULSAR MICROWAVE CORPORATION

PULSAR MICROWAVE CORPORATION
48 INDUSTRIAL WEST, CLIFTON NJ 07012
TEL: 973-779-6262 FAX: 973-779-2727
WWW.PULSARMICROWAVE.COM

DESCRIPTION : Directional Coupler

MODEL NO. : CS20-04-436/13

DIMENSIONS ARE IN INCHES
DECIMAL TOLERANCE:
2 PLACE ± .02
3 PLACE ± .010

SIZE A | CAGE CODE : 0HR85 | REV CODE : 170130

SCALE : N / A | ALL SPECIFICATIONS ARE SUBJECT TO CHANGE WITHOUT NOTICE AT ANY TIME | SHEET 1 OF 1